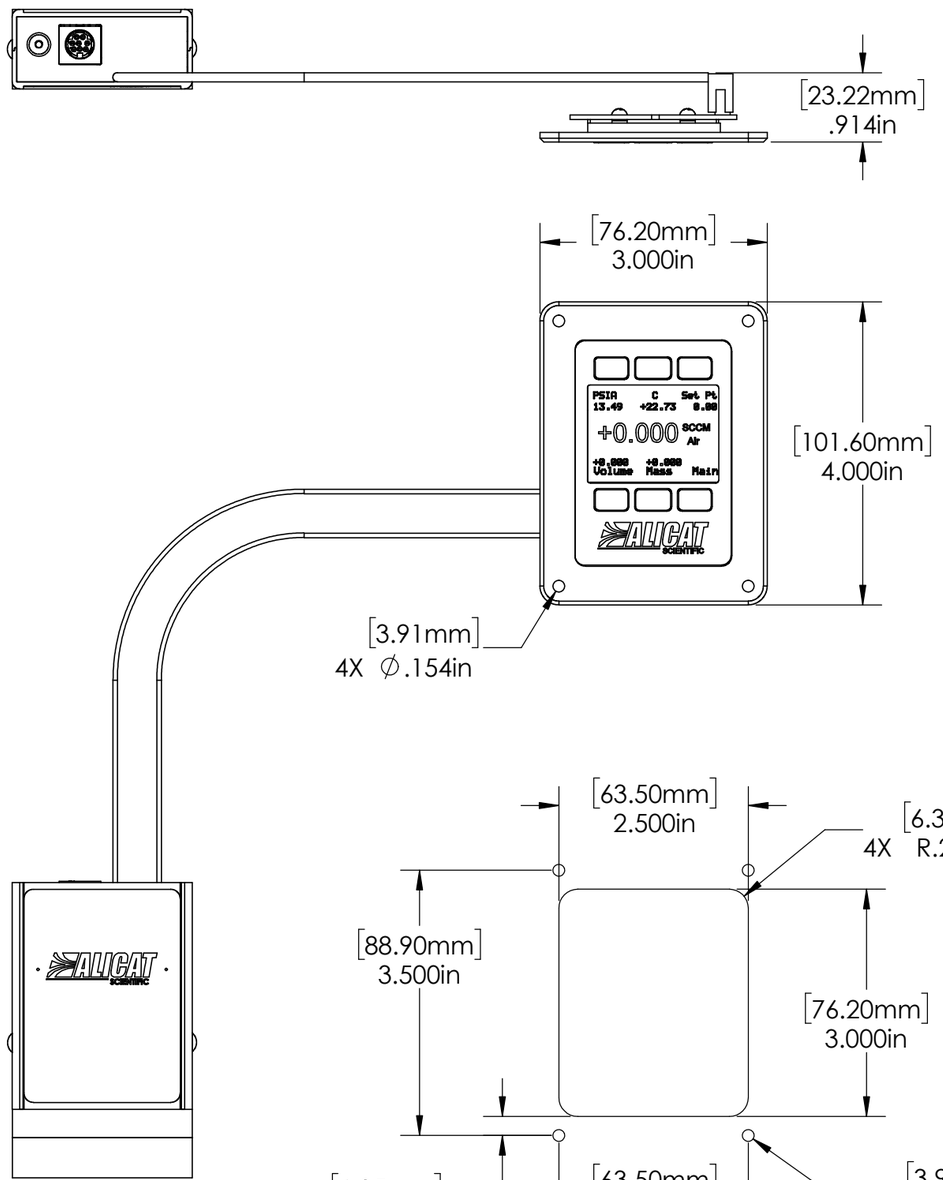

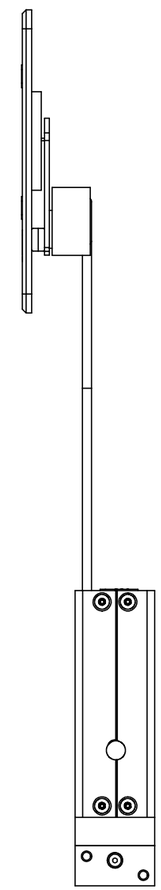

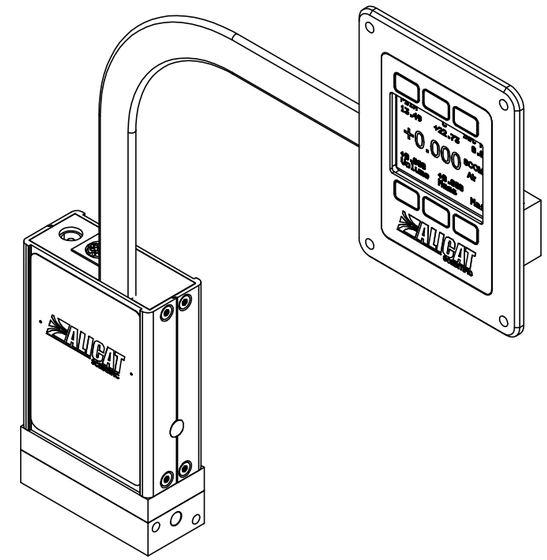

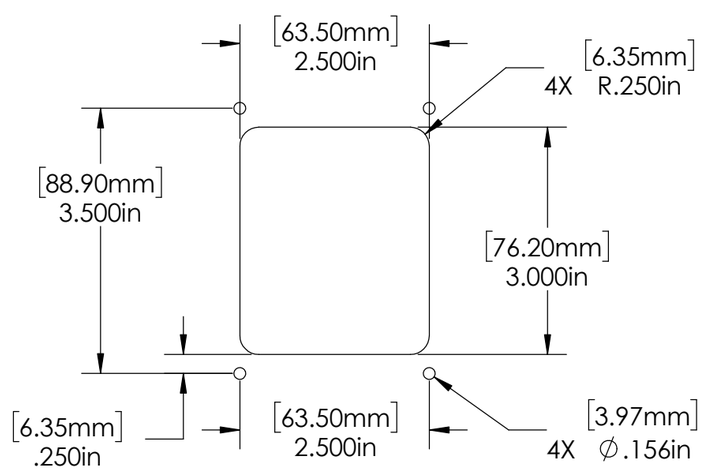

Panel Cut Out Template
Use 4x 6-32 Screws and Nuts

ALICAT SCIENTIFIC

DOC-RDTEMPLATE

DATE
5/26/2009

REV. **1**

REV. NO.	DESCRIPTION	DATE
1	Added outer dimensions	5/10/2021